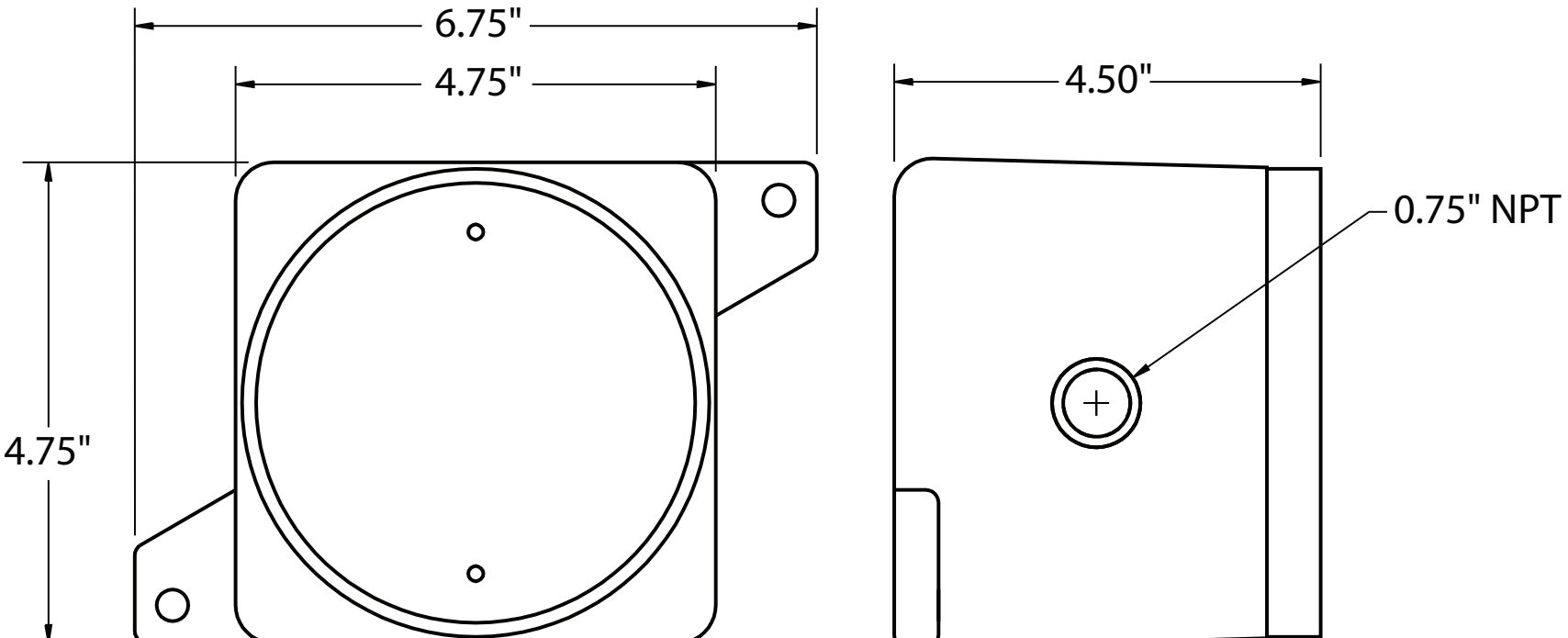
6.75"
4.75"
4.75"
4.50"
0.75" NPT