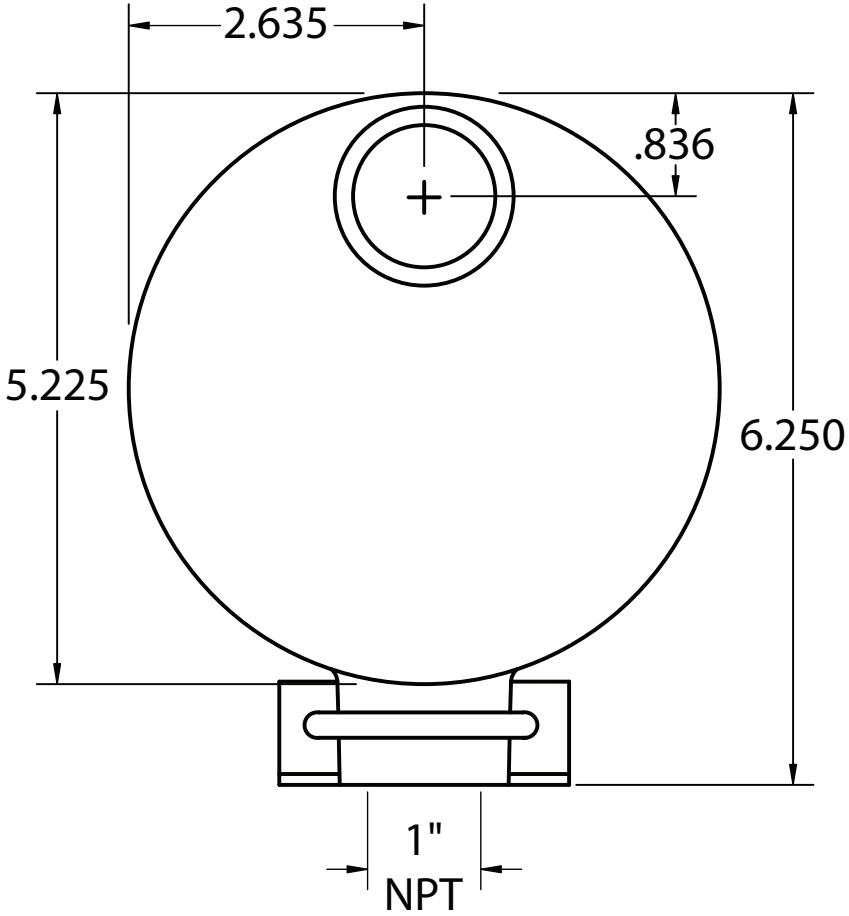
2.635
.836
5.225
6.250
1"
NPT

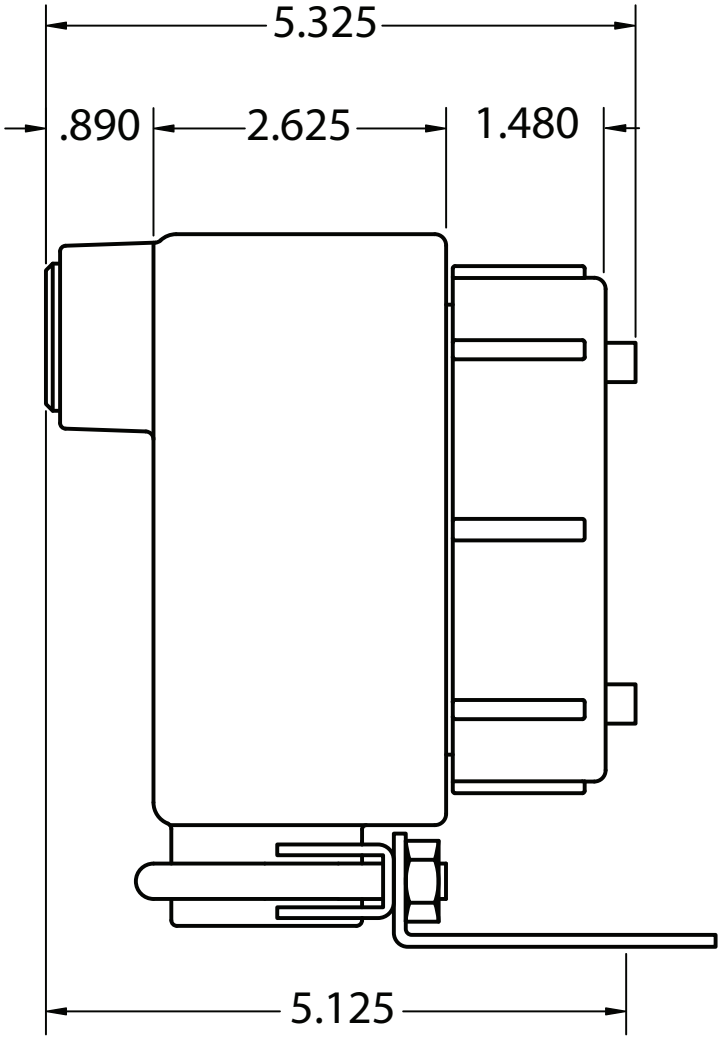
5.325
.890
2.625
1.480
5.125