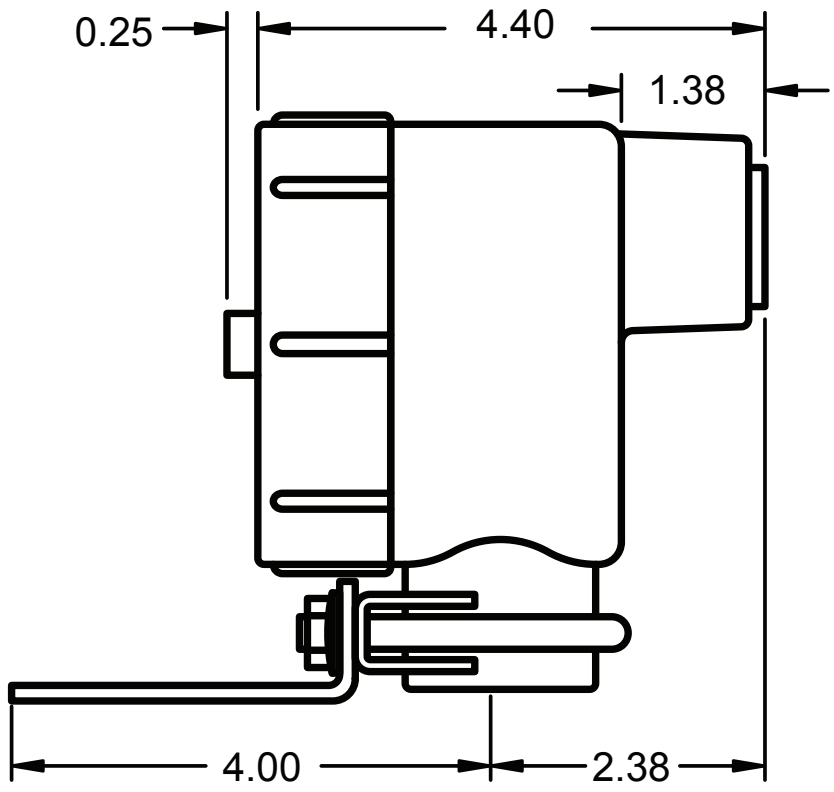
0.25
4.40
1.38
4.00
2.38

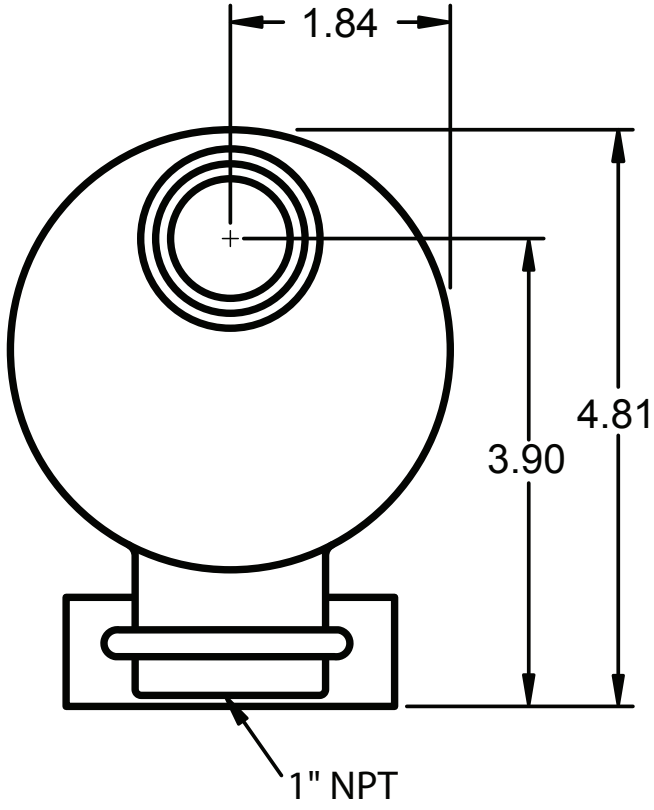
1.84
4.81
3.90
1" NPT

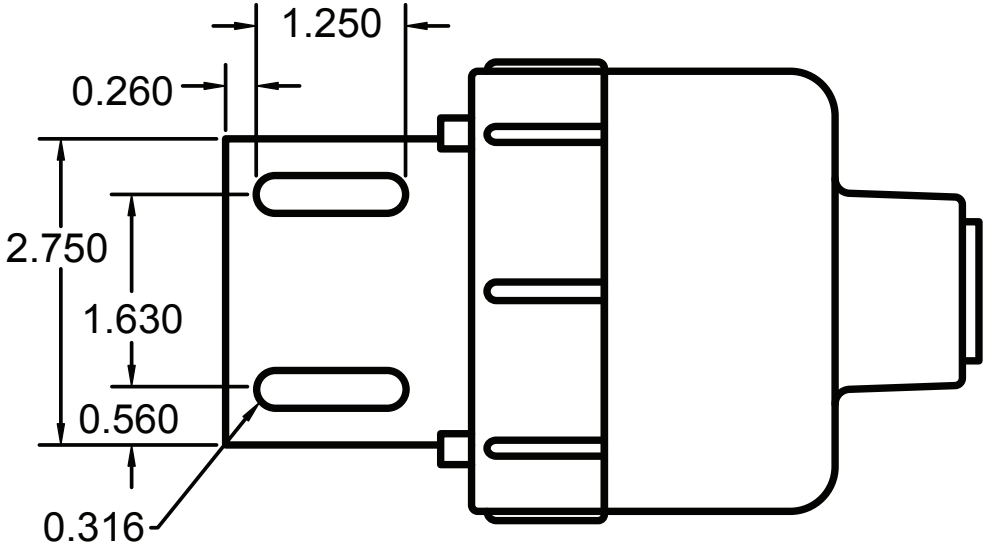
1.250
0.260
2.750
1.630
0.560
0.316