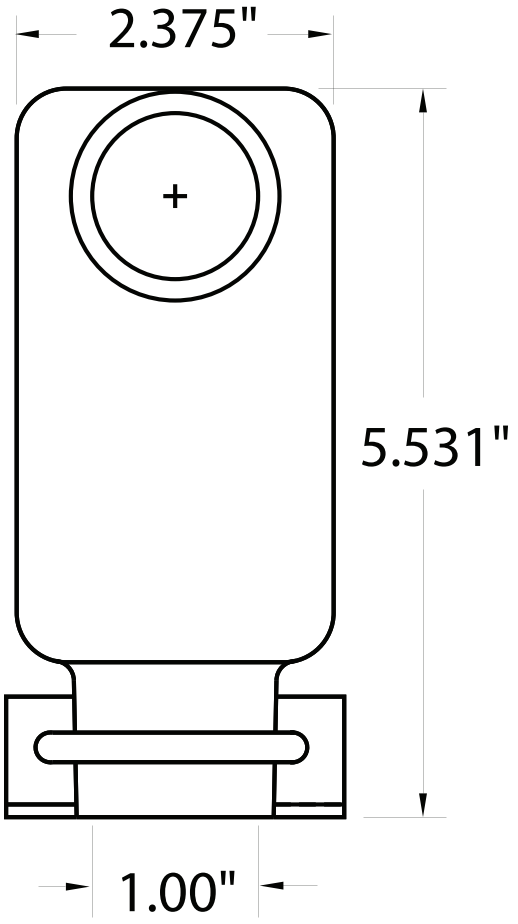
2.375"
5.531"
1.00"

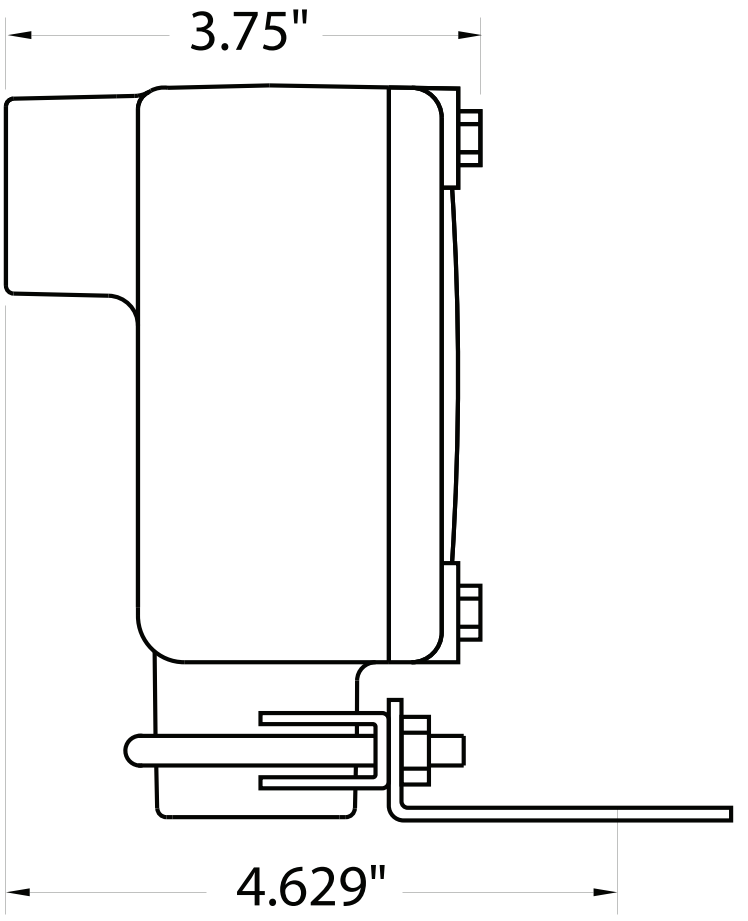
3.75"
4.629"